PASSION INNOVATES FUTURE

AVL DITEST

AVL DiTEST micrΩHM



The AVL DiTEST micrΩHM measures the internal resistance of single modules of traction batteries as well as the contact resistances at the connectors between the modules (busbars) and the resistances of the busbars itself. The compact design combined with intuitively guided software allows to carry out the measurements in the workshop – quickly, easily and accurately.

The internal resistance is a key indicator for the state of health of a battery module. A healthy battery pack has both internal resistances of the modules as well as resistances of the busbars low. These resistances may increase with aging or when battery modules and busbars get defective. If a high current is then called up, e.g. when accelerating, the battery can overheat. This leads to a voltage drop and thus reduces the power output of the battery. In the worst case, an increased resistance can even cause a fire in the battery.

By measuring and comparing the internal resistances of different modules within the battery pack, those with increased resistance can be found and replaced. micrΩHM can measure precisely even very low resistances in µΩ-range and is therefore capable to find bad contact points or damaged busbars. Moreover, you can use micrΩHM to assure a proper installation of new modules and their connections, because dirty or not fully tightened busbars will show a higher contact resistance.

AVLDiTEST.com

AVL DiTEST micrΩHM

Workshop-optimized tool for assuring reliable processes when monitoring and exchanging the modules and busbars in the traction battery

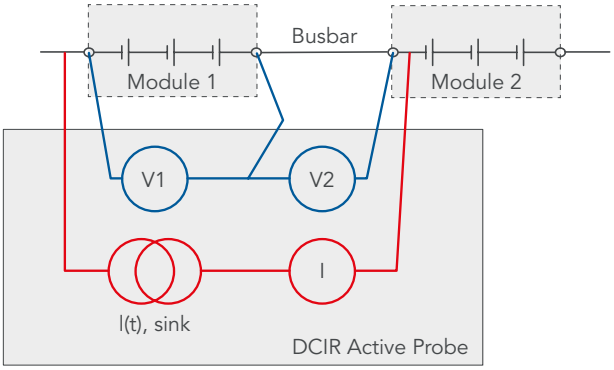

FEATURES

- Measuring the internal resistance of a battery module
- Measuring the resistance of the module-to-module connection including the contact resistances
- Free adjustable current and pulse duration
- Kelvin clamps to compensate the resistance of the measurement lines
- Safe operation
- Intuitive operator guidance
- Powered by USB

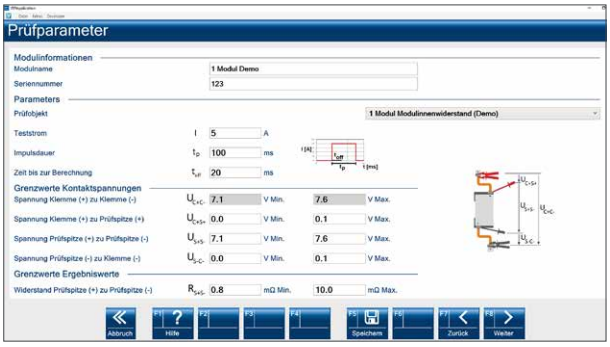

MEASUREMENT PRINCIPLE

- Direct current discharge pulse is applied (current sink)
- Voltage drops are measured
- Internal resistance of the module/contact resistance is calculated

SOFTWARE AND USER INTERFACE

- Software based on Windows OS

TECHNICAL DATA

Internal resistance and contact resistance measurement	
Operating voltage	up to 85 VDC (internal resistance und contact resistance measurement) up to 1000 VDC (voltage measurement)
Current pulse	up to 40 A, depending on battery and contact type requirements
Pulse duration	up to 10 s, depending on battery and contact type requirements
Accuracy	Internal resistance measurement: +/- 500 µΩ Contact resistance measurement: +/- 2 µΩ
Resolution	Internal resistance measurement: 100 µΩ Contact resistance measurement: 0.1 µΩ
Weight	approx. 0.1 kg (without cables)
Dimensions (W x L x H)	185 x 280 x 65 mm
Connections	USB 2.0
Standards and certifications	EN 61010-1 EN 61010-2-30 EN 61010-031 UL 201

Published by: Headquarters: AVL DiTEST GmbH
Alte Poststraße 156, 8020 Graz, AUSTRIA, AVLDiTESTSales@avl.com
German branch: AVL DiTEST GmbH
Schwadermühlstraße 4, 90556 Cadolzburg, Germany, Tel. +49 9103 713-540, avl.ditest@avl.com
www.avlditest.com

08/2024. May be subject to change